NET/1 Connectors

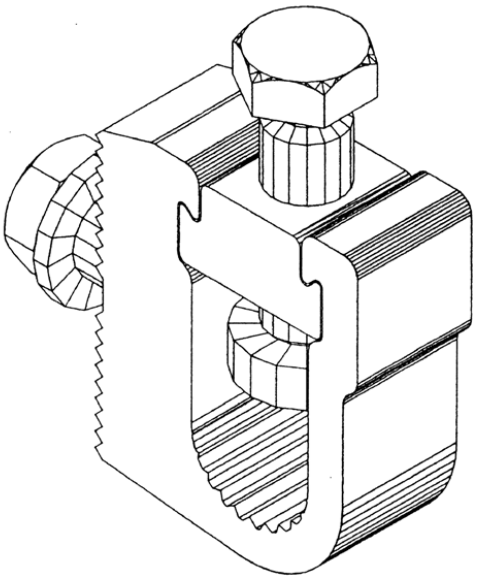

Principle Application

The connection of consac cable (aluminium sheath) to waveform cable neutral/earth wires.

Range

Product Reference	Conductor c.s.a. (mm²)		Approx. Unit Weight (grammes)
	min	max	
NET/1	40	240	200

The Hepworth Neutral/Earth Connector has been designed to connect either stranded copper or stranded aluminium neutral/earth conductors of CNE (waveform) mains distribution cables to the aluminium sheath of CONSAC cable.

All joint configurations can be accommodated dependant on the total cross sectional area of neutral/ earth conductor to be jointed.

Riverholme Works, Huddersfield Road, Holmfirth, West Yorkshire HD9 3TN, UK
Tel: +44 (0)1484 681115 Fax: +44 (0)1484 687352
info@sicame.co.uk www.sicame.co.uk

NET/1 Connectors

Physical Dimensions

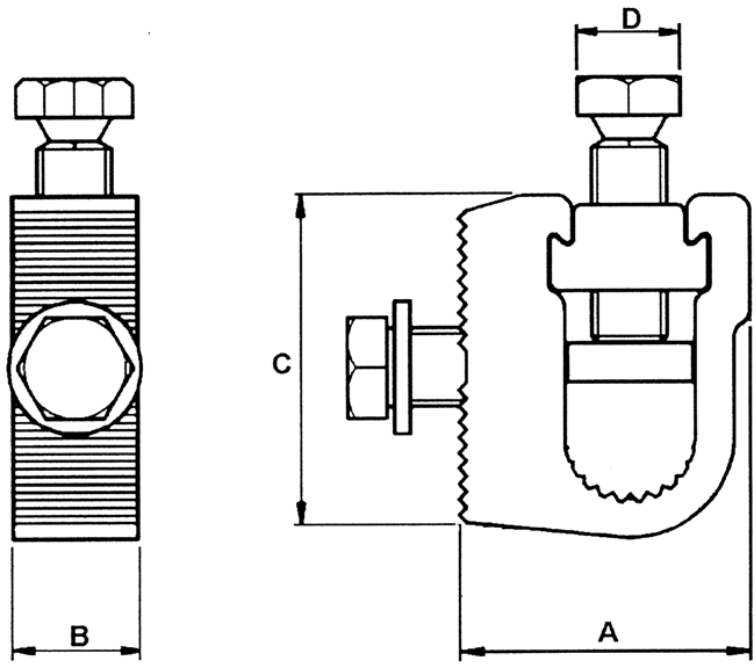

Ref. Code	Dimensions (mm)			
	A	B	C	D
NET/1	37	16	44	13

Material

CZ121 Copper Alloy to BS2874

Fitting Instructions

1. Punch a M1O clearance hole in consac aluminium sheath and assemble connector to sheath.
2. Arrange the CNE conductors into a bunch and where necessary cut the conductors to length.
3. Thoroughly abrade all conductors around the assembly area.
4. Fit the conductors into the yoke, insert the bridge piece and tighten the screw until positive location is achieved.
5. Due to the connector employing a shear head system check for even distribution of the conductors before finally tightening the screw until the head shears.

SICAME ELECTRICAL DEVELOPMENTS
A Groupe Sicame Company

©COPYRIGHT
Sicame Electrical Developments Ltd operates a continuous product design development and improvement programme and offers active co-operation establishing satisfactory procedures and systems to meet new or unusual jointing situations. The company reserves the right to introduce modifications to the above designs and specifications without prior notice.