Mechanical Termination with Moisture/Contaminant Block for Medium/High Voltage Applications

MECHANICAL CONNECTORS

'EUML/NC' Aluminium Terminations

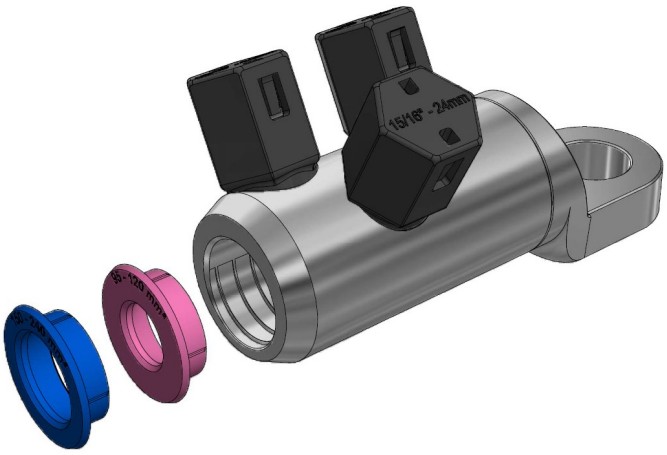

Principle Application:

Straight jointing of circular stranded aluminium or copper conductors for all cable voltages up to and including 42kV.

Range:

Connector Reference	Internal Bore (mm²)	Cable Range (mm2)						Stud Size (mm)	Cable Centralising Ring (s)	
										
		Stranded Circular (mm²	Solid Circular (mm²)	Solid Sector 3 core (mm²)	Solid Sector 4 core (mm²)	Stranded Sector	Compacted Circular		Colour	Range (mm²)
EUML0-12	13	16.95 *(#6-3/0)*	16.95	50	50-70	35-75	16-95	12	White x 1 Green x 1	16-25 35-50
EUML1-12 EUML1-16	16	35-150 *(#2-300 kcmil)*	35-150	25-95	25-95	50-120	35-150	12	Orange x 1 Purple x 1	35-50 70-95
EUML2-12 EUML2-16	21	50-240 *(1 AWG-500 kcmil)*	50-240	50-150	50-185	50-240	50-240	12 16	Yellow x 1 Red x 1	50-95 120-150
EUML2.5-12 EUML2.5-16 EUML2.5-20	26	95-400 *(3/0-750 kcmil)*	95-400	185-240	185-300	185-240	95-400	12 16 20		
EUML3-12 EUML3-16 EUML3-20	30	240-500 *(450-900 kcmil)*	240-500	-300	-	240-300	240-500	12 16 20	Brown x 1	240-300
EUML8-12 EUML8-16 EUML8-20	34	400-630 *(800-1250 kcmil)*	400-630	-	-	300-400	400-630	12 16 20	-	-
EUML9-16 EUML9-20	43	800-1000 *(1550-1950 kcmil)*	800-1000	-	-	-	800-1000	16 20	-	-

Mechanical Termination
With Moisture/Contaminant
Block for Medium/High
Voltage Applications

‘EUML/NC’ Aluminium Terminations

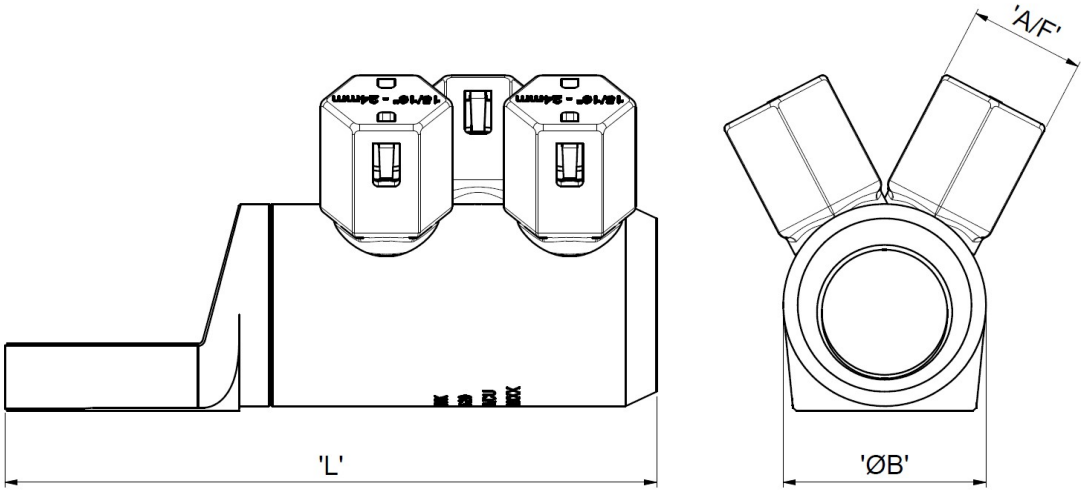

Connector Reference	Dimensions (in/mm)		
	‘L’	‘ØB’	‘AF’
EUMF0	2.55” (65mm)	1.18” (30mm)	3/4” (19mm)
EUMF1	3.14” (80mm)	1.10” (28mm)	3/4” (19mm)
EUMF2	4.13” (105mm)	1.33” (34mm)	15/16” (24mm)
EUMF2.5	5.31” (135mm)	1.65” (42mm)	15/16” (24mm)
EUMF3	5.62” (143mm)	1.85” (47mm)	15/16” (24mm)
EUMF8	5.62” (143mm)	2.00” (51mm)	15/16” (24mm)
EUMF9	6.02” (153mm)	2.48” (63mm)	15/16” (24mm)

Material: Aluminium Alloy (Electro-Tinned)

Test Specification: BS EN 61238-Class A

Test Report No: TTR/345

Fitting instructions:

1. Strip insulation from each core equal to the depth of the bore.
2. Wire brush the exposed conductor cores and wipe clean (optional).
3. Fit the appropriate sized cable centering ring (if required).
4. Align and position the conductor cores in each of the bores ensuring that the core is fully inserted to the center wall.
5. Fit the universal shear screws within the connector and torque tighten one turn at a time, using a 3/4” or 15/16” AF socket, until the bolts have sheared.