HVTM1/…. Aluminium Connectors

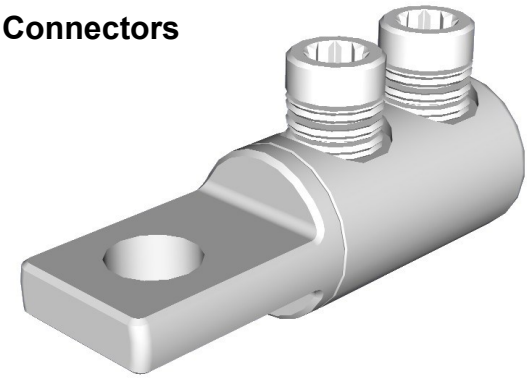

Principle Application: Termination of stranded and solid 3 & 4 cored shaped conductors.

Range:

Connector Reference	Core C.S.A. (mm^2)				Stud Size
	Stranded		Solid		
	Min	Max	Min	Max	
HVTM 1/1-12	16	120	16	95	M12
HVTM 1/1-16	16	120	16	95	M16
HVTM 1/2-12	16	185	16	150	M12
HVTM 1/2-16	16	185	16	150	M16
HVTM 1/3-12	70	300	70	240	M12
HVTM 1/3-16	70	300	70	240	M16

The **'HVTM'** range of centre palm mechanical lugs incorporate an integral moisture block and utilises the patented "universal" range taking shear bolts. The connector comes complete with core stripping guides.

Suitable for all cable voltages up to and including 11000 volts.

Secondary Application: Termination of stranded/solid circular cored conductors.

Range:

Connector Reference	Core C.S.A. (mm^2)				Stud Size
	Stranded		Solid		
	Min	Max	Min	Max	
HVTM 1/0-12	-	-	-	95	M12
HVTM 1/1-12	16	120	16	185	M12
HVTM 1/1-16	16	120	16	185	M16
HVTM 1/2-12	16	185	16	300	M12
HVTM 1/2-16	16	185	16	300	M16
HVTM 1/3-12	70	400	70	400	M12
HVTM 1/3-16	70	400	70	400	M16

Note: For jointing other core configurations/sizes please contact Sicame Dept

HVTM1/…. Aluminium Connectors

Physical Dimensions

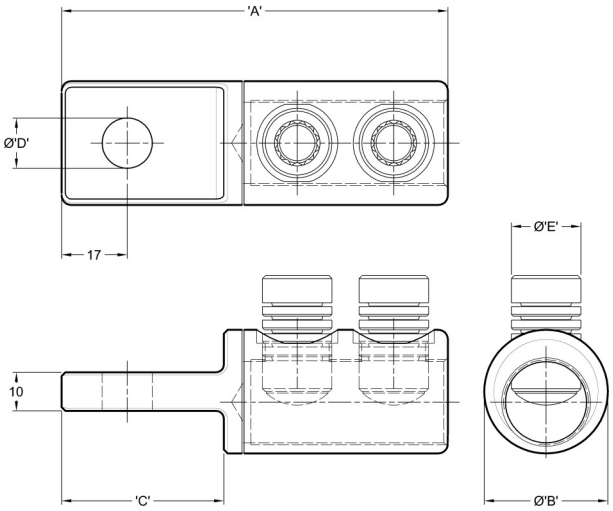

Connector Reference	Dimensions (mm)				
	'A'	Ø'B'	'C'	Ø'D'	Ø'E'
HVTM 1/0-12	87	22	42	13	M10
HVTM 1/1-12	98	28.5	42	13	M16
HVTM 1/1-16	98	28.5	42	17	M16
HVTM 1/2-12	100	32	42	13	M18
HVTM 1/2-16	100	32	42	17	M18
HVTM 1/3-12	107	37.5	42	13	M18
HVTM 1/3-16	107	37.5	42	17	M18

Note: HVTM 1/0-12 uses 13mm A/F hexagon head shear screws.

Material:

Aluminium Alloy

Test Specification:

Engineering Recommendation C79 / IEC 1238-1. Test Report No. TTR144, TTR145

Fitting instructions:

1. Strip insulation from each core equal to the depth of the bore guide + 5mm.
2. Thoroughly abrade exposed conductor cores. (See note).
3. Align the cores within the yoke.
4. Tighten the universal bolts consecutively one turn at a time until all the heads have sheared.

The appropriate tooling is to be used at all times, typical examples shown below.

'JTS/7I' Universal Screw Ratchet Tool (Insulated)

'JTS/16' Universal Screw Socket (17mm A/F)

Note: When jointing copper conductor, wrap the supplied brass gauze around the core prior to installation.

* Conductor cores 10mm^2 and below should be doubled to achieve the necessary cross sectional area.

Important: Please note that when using the HVTM terminations in joints normally rated in excess of 3.3KV, it is essential that the Jointing System Supplier's instructions for stress relieving and re-insulation techniques are strictly adhered to.

SICAME ELECTRICAL DEVELOPMENTS
A Groupe Sicame Company

©COPYRIGHT
Sicame UK Ltd operates a continuous product design development and improvement programme and offers active co-operation establishing satisfactory procedures and systems to meet new or unusual jointing situations. The company reserves the right to introduce modifications to the above designs and specifications without prior notice.

SICAME UK