JTS Tools

JTS/4

Jointers Piercing Tool

Dimensions (Folded) : 203mm x 88mm Weight: 1616 gms

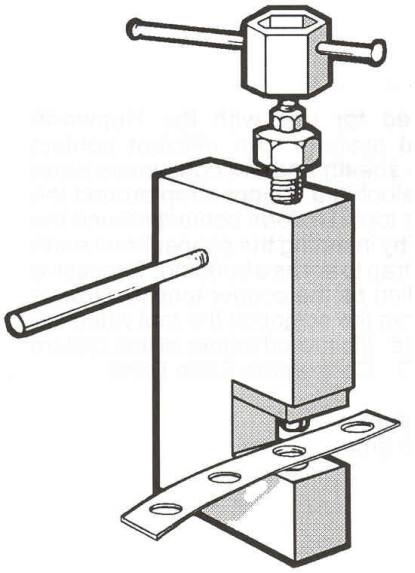

The Sicame Piercing Tool is hand-operated and designed to cut holes in metal strip on site. Each tool is supplied with a detachable holding handle and operating spanner and is suitable for use on steel, copper and aluminium.

For copper earth strip, steel tape cable armour, copper bus bars not thicker than 1/8", or aluminium cable sheaths, to provide clearance for 3/16 " or 3/8 " bolts or rivets.

SICAME ELECTRICAL DEVELOPMENTS
A Groupe Sicame Company

©COPYRIGHT
Sicame UK Ltd operates a continuous product design development and improvement programme and offers active co-operation establishing satisfactory procedures and systems to meet new or unusual jointing situations. The company reserves the right to introduce modifications to the above designs and specifications without prior notice.

SICAME UK

SICAME
ELECTRICAL
DEVELOPMENTS
A Groupe Sicame Company

©COPYRIGHT
Sicame UK Ltd operates a continuous product design development and improvement programme and offers active co-operation establishing satisfactory procedures and systems to meet new or unusual jointing situations. The company reserves the right to introduce modifications to the above designs and specifications without prior notice.

SICAME
UK